## SPECIFICATION

| | | | |
|---|---|---|---|
| □□□□ □□□□ | 20□ | □□□□ | 608nm□10mw / 808nm□20mw |
| □□□□ | ±1□□/7□ | □□□ | II□<1mw |
| □□□□□□□□□ | ±3° | □□□□ | □2600mAh * 2 |
| □□□□□□□□□ | < 4S | □□□□ | □ |
| □□□□ | □□□□ | □□□□ | 7□□□ |
| □□□□ | -10℃... + 40℃ | □□□ | 6□□ |
| □□□□ | 26□80□□ | □□ | 108 * 78 *78□□ |

## PRODUCT PICTURES

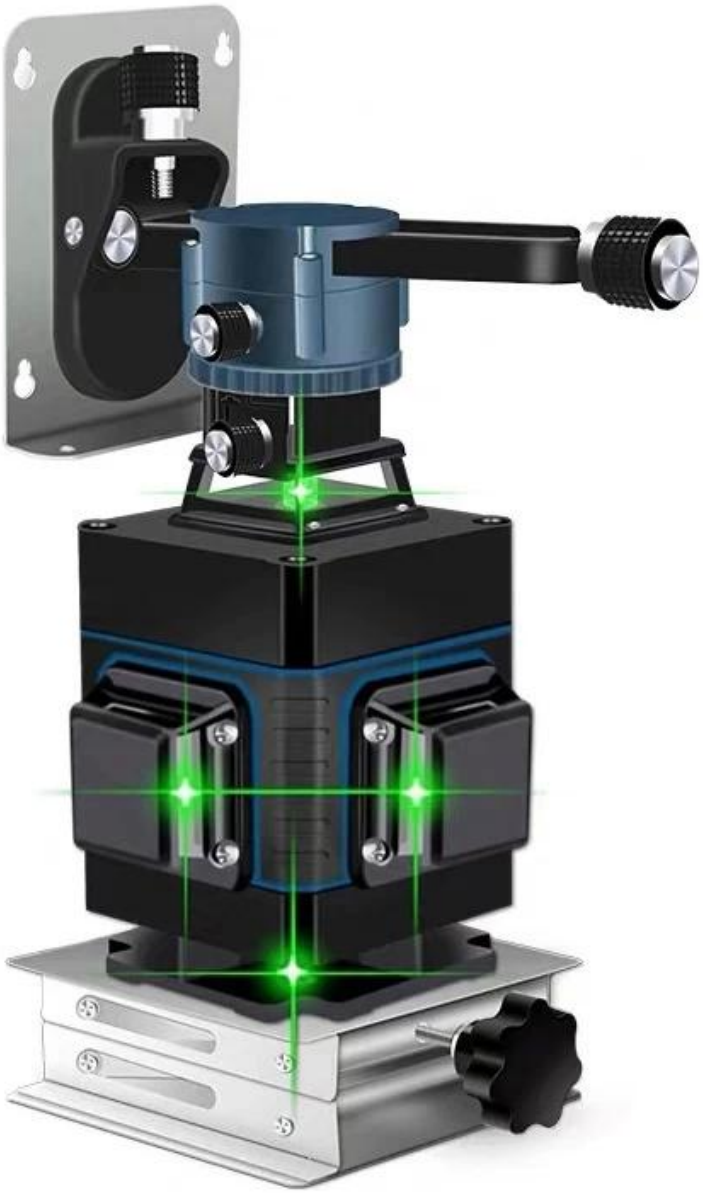

# 16 LINES

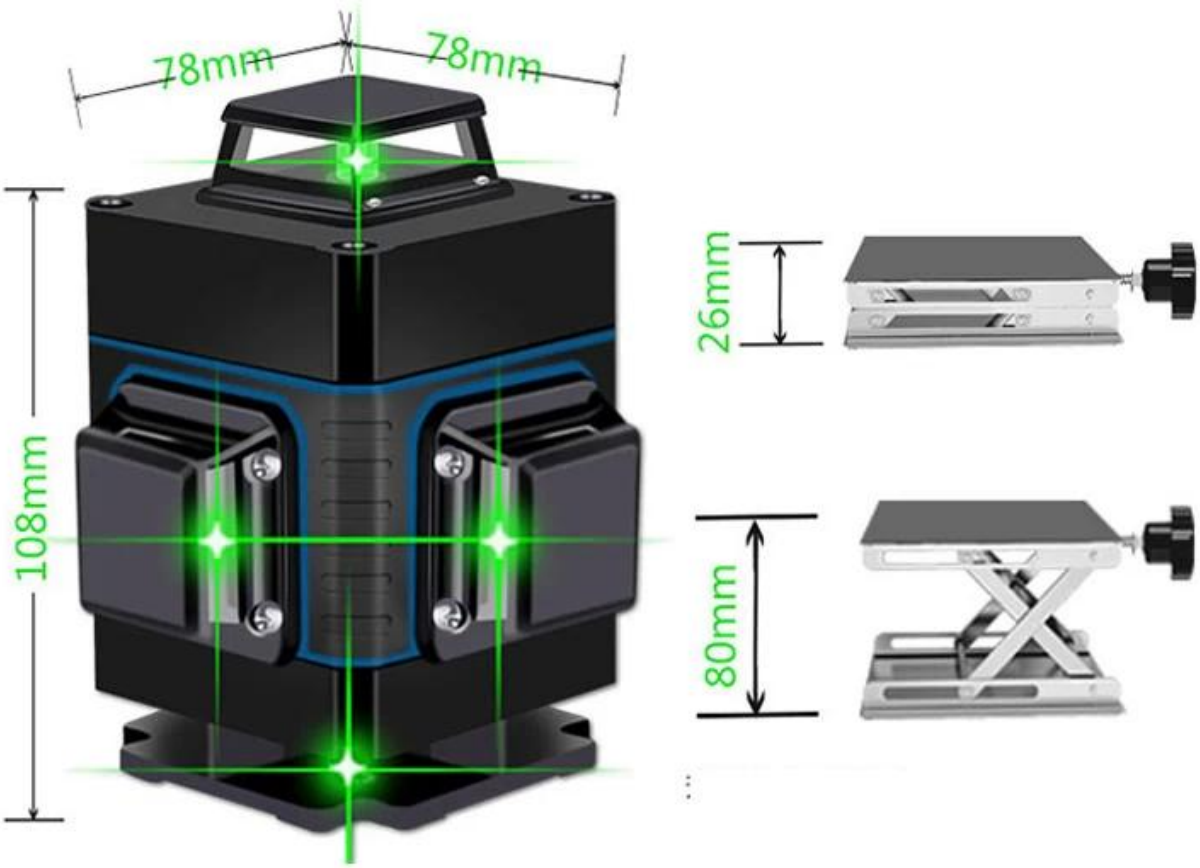

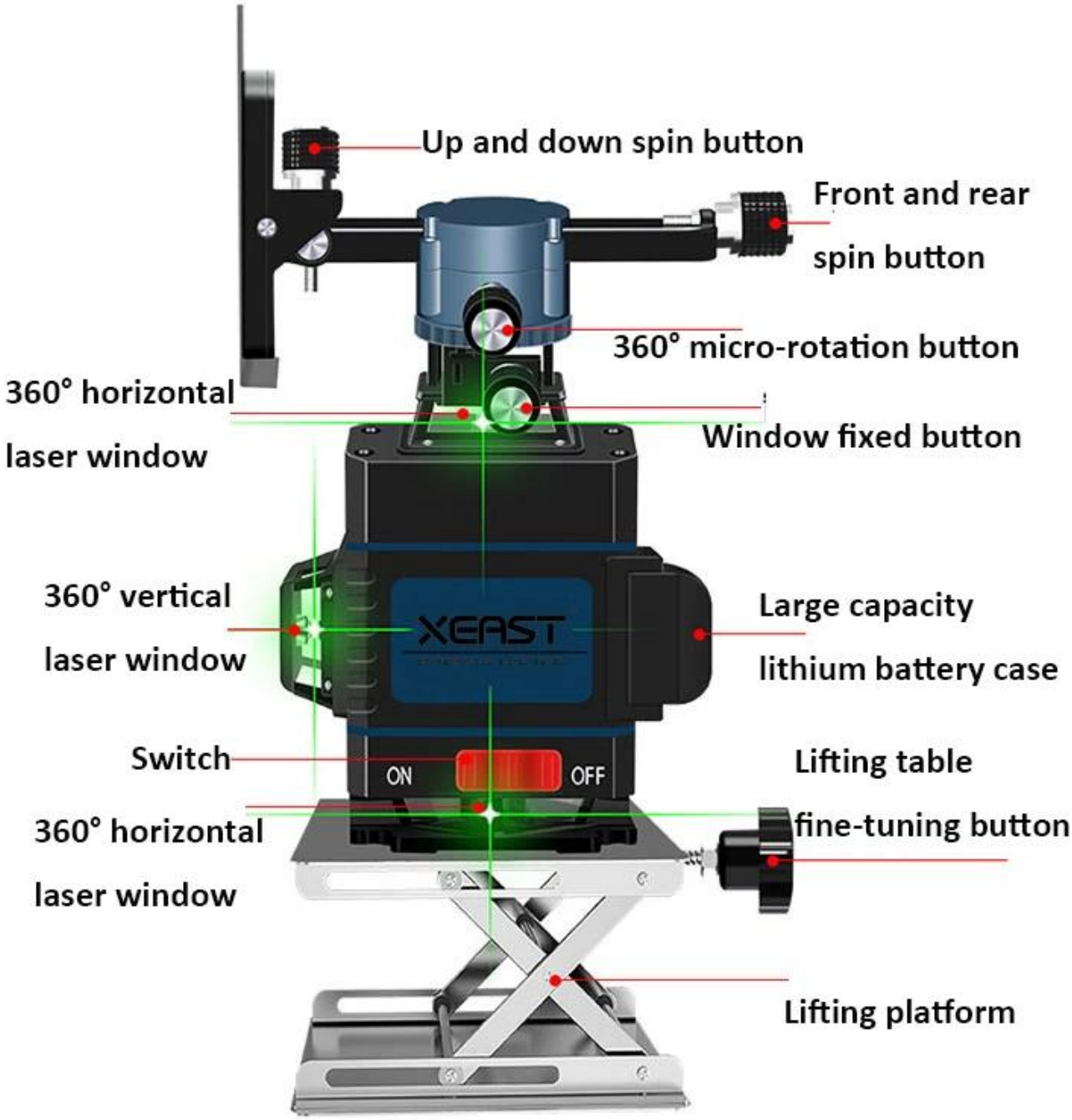
Up and down spin button
Front and rear
spin button
360° micro-rotation button
360° horizontal
laser window
Window fixed button
360° vertical
laser window
XEAST
Large capacity
lithium battery case
Switch
ON
OFF
Lifting table
360° horizontal
laser window
fine-tuning button
Lifting platform

# 18650 large capacity rechargeable lithium battery

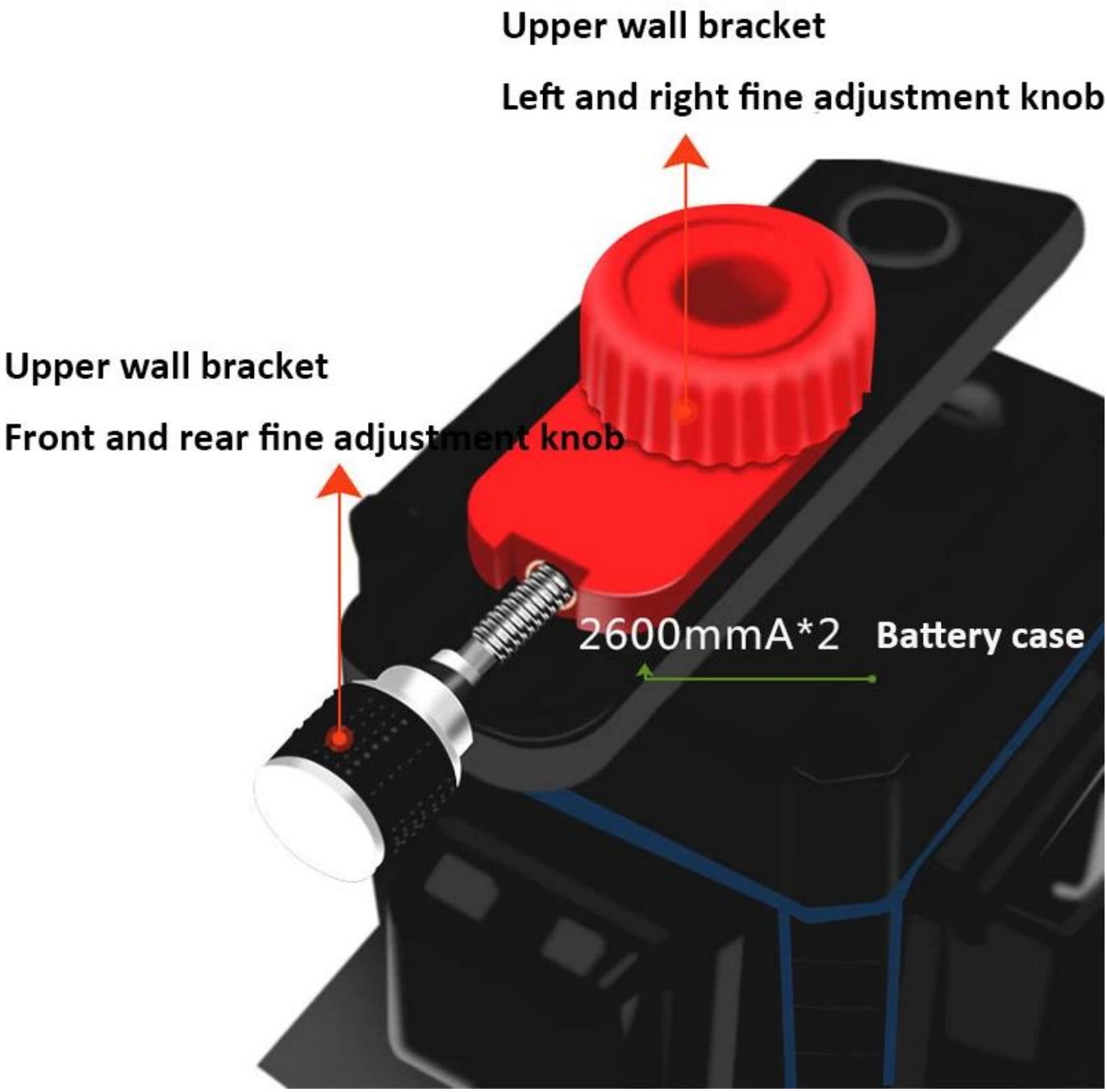

# Direct use of lithium battery / connected power supply

Long distance
Remote operation

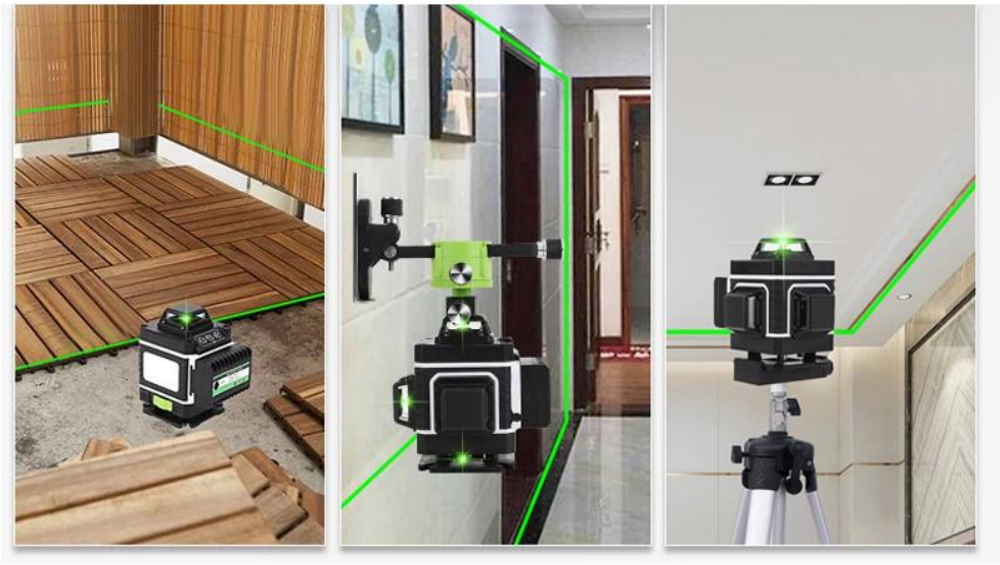

Floor tile Wall tile Ceiling tile

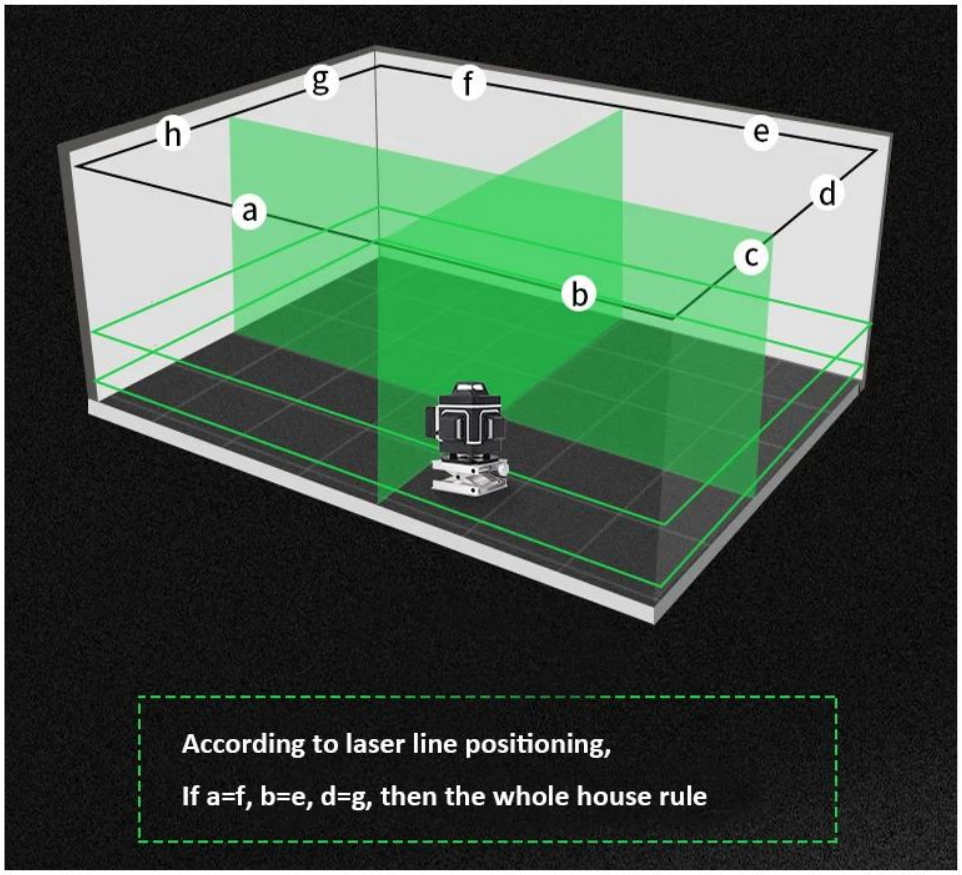

## Package Include

## Terms of Trade

1□□□□□□□□□□□T / T□L / C□Paypal□MoneyGram□Western Union□
□□□30□□□□□□70□□□□
2□□□□□□□
□□□□□□□□□□□□□□□□□□□□□□□□□□□□□DHL□TNT□UPS□FEDEX□EMS□SPSR□139□□□□□□□□□□
3□□□□□□□□□□□□□□□□□□□□□□□□□□□□□□□□□□□

## Company Informations

SALES TEAM
YEAST®
Your Testing Partner
WOKRSHOP