SPECIFICATION

□□□□□2□□IEC / EN60825-1 / 2014□□<1mW□□□□
□□□□□505-520nm
□□/□□□□□±3mm / 10m
□□/□□□□□±4°
□□□□□□□□25□□□□□□□□□□□□□50□
□□□□□□□□□□□□□□□□□□□7□□
□□AA□□□□□□□□□□□□□□□□2□□
□□□□□□□□□4×″AA″□LR6□□□
□□□□□□□IP54
□□□□□□□14℉~113℉□-10℃~45℃□
□□□□□1/4“-20□5/8”-11

PRODUCT PICTURES

XEAST®

Laser Window
0.94in / 24mm
4.25in / 108mm
Keypad
Power/Lock
Keypad
2.52in / 64mm
4.92in / 125mm
Charging Interface
1/4-20 Threaded Mount
5/8-11 Threaded Mount
Battery Compartment

SWITCH LINE MODE

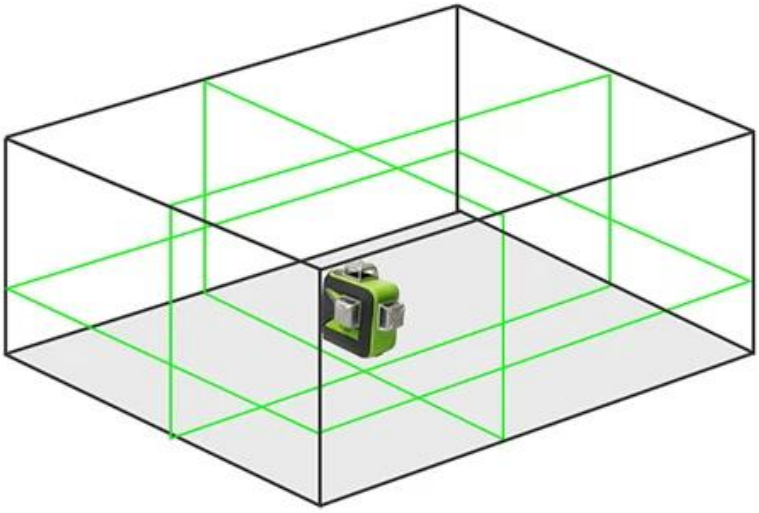

Horizontal Line	Vertical Line	Two Vertical Lines
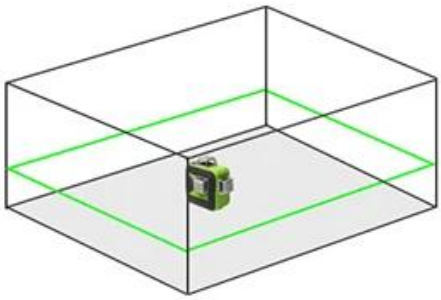	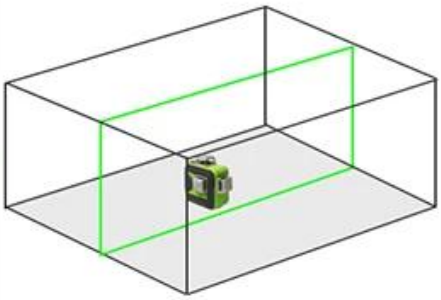	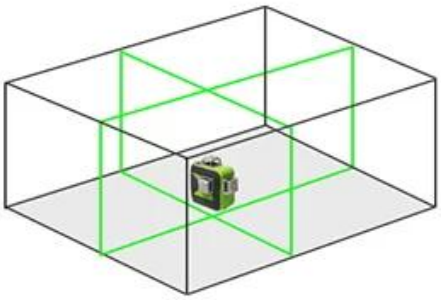

self-leveling mode

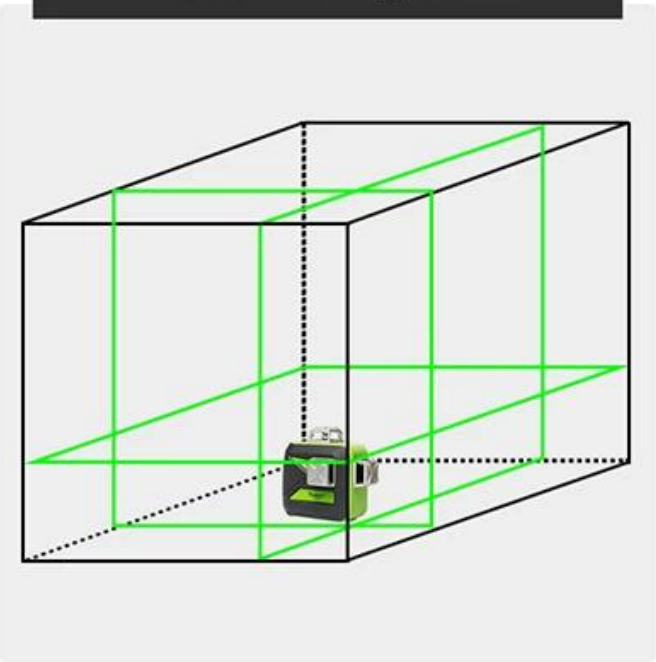

Maintain The 90° Angles

Blinks Every 3 Seconds

Pendulum Locked

Self-level Available

Within 4 Degree

≤ ± 4°

Pendulum Unlocked

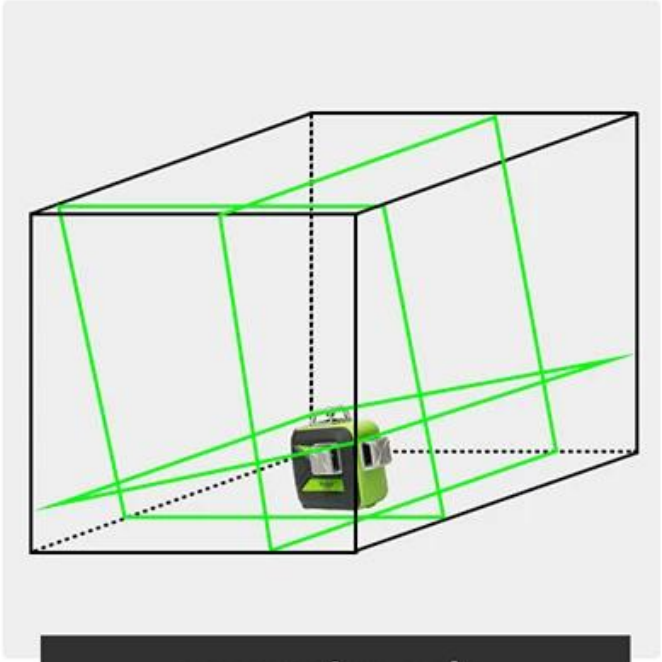

manual mode

Inc. AA Battery Holder

√ use with AA Battery

Inc. 2600mA Universal Li-ion Battery

√ use with lithium battery

Inc. A Power Charger

√ work when direct input charging

LASER

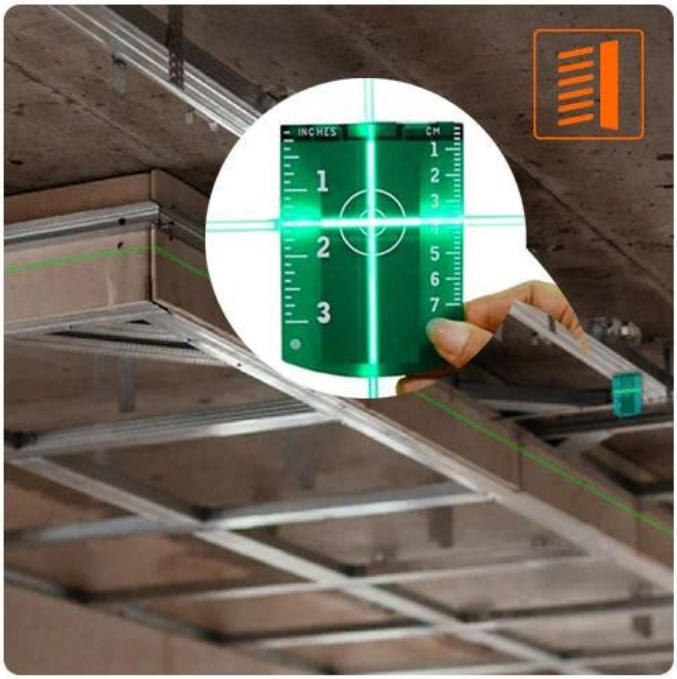
INCHES
CM

1/4-20 Threaded Mount
5/8-11 Threaded Mount

360° Horizontal Line

360° Vertical Line

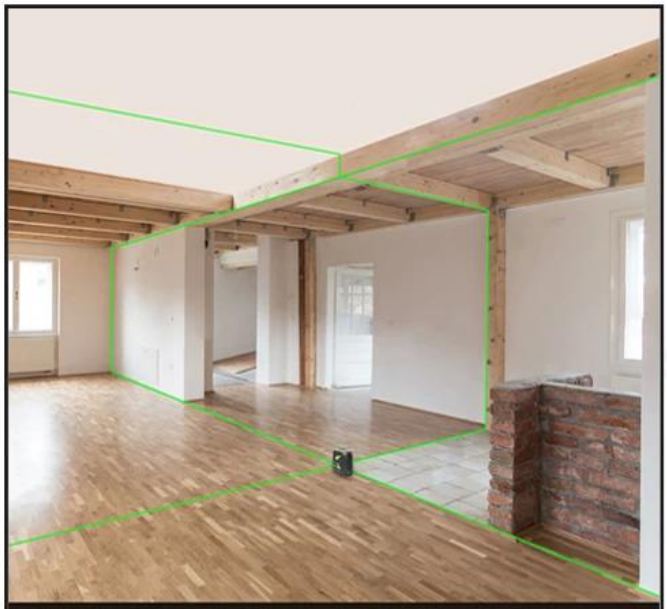

Two 360° Vertical Lines

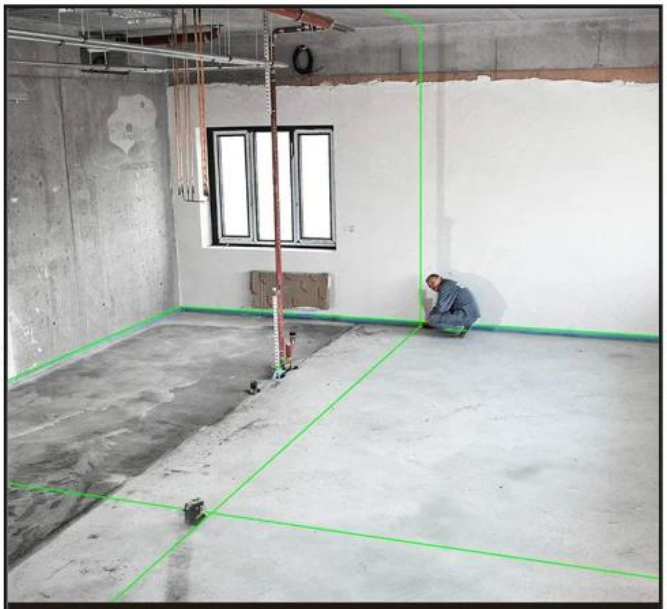

360° Horizontal and 360° Vertical Lines

Package Include

XEAST®

Terms of Trade

1□□□□□□□□□□□T / T□L / C□Paypal□MoneyGram□Western Union□
□□□30□□□□□□70□□□□
2□□□□□□□
□□□□□□□□□□□□□□□□□□□□□□□□□□□□□DHL□TNT□UPS□FEDEX□EMS□SPSR□139□□□□□□□□□□
3□□□□□□□□□□□□□□□□□□□□□□□□□□□□□□□□□□□□

Company Informations

SALES TEAM
YEAST®
Your Testing Partner
WOKRSHOP