SPECIFICATION

□□□□ □□□□	20□□□□	□□□□□□□□	608nm□10mw / 808nm□20mw
□□□□□□□□	±1mm / 7m	□□□□□□□□	II□□1mw
□□□□□□□□□□□□□□	±3°	□□□	2600mAh * 2
□□□□□□□□□□□	4□□□	□□□□	□□
□□□□□□□	□□□□□□□	□□□□	7□□
□□□□	-10℃...+ 40℃	□□□	6mm
□□□□□□□	26□80mm	□□	108×78×78mm

PRODUCT PICTURES

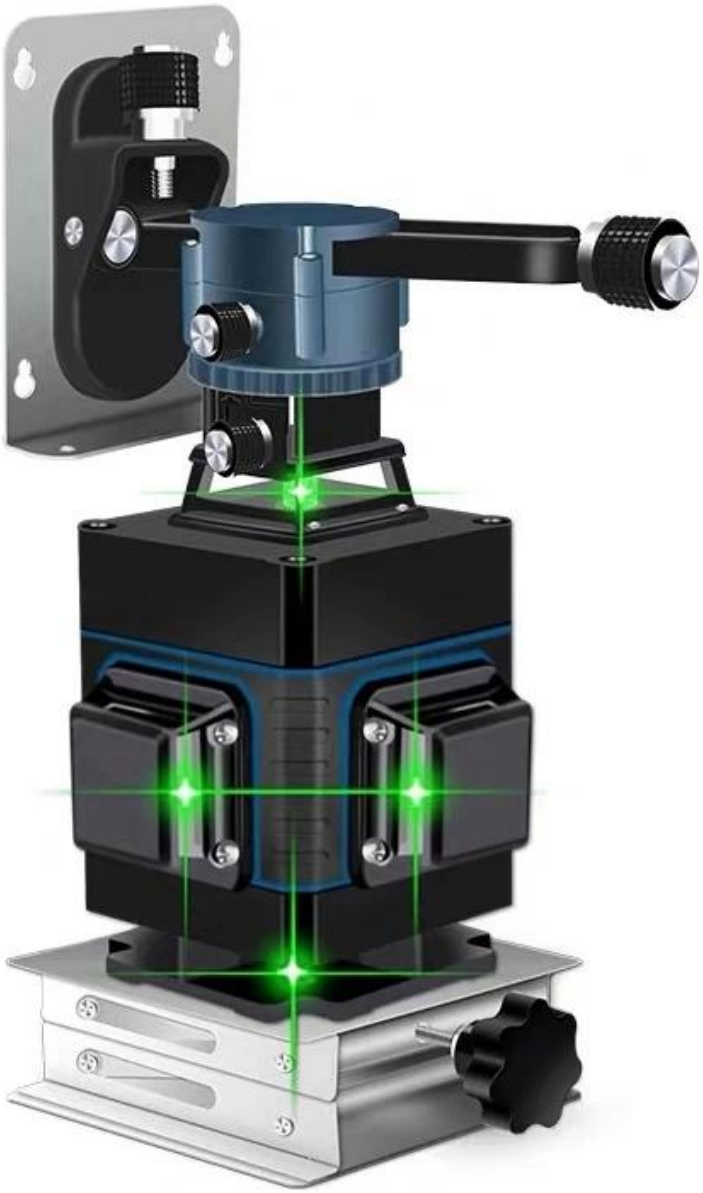

16 LINES

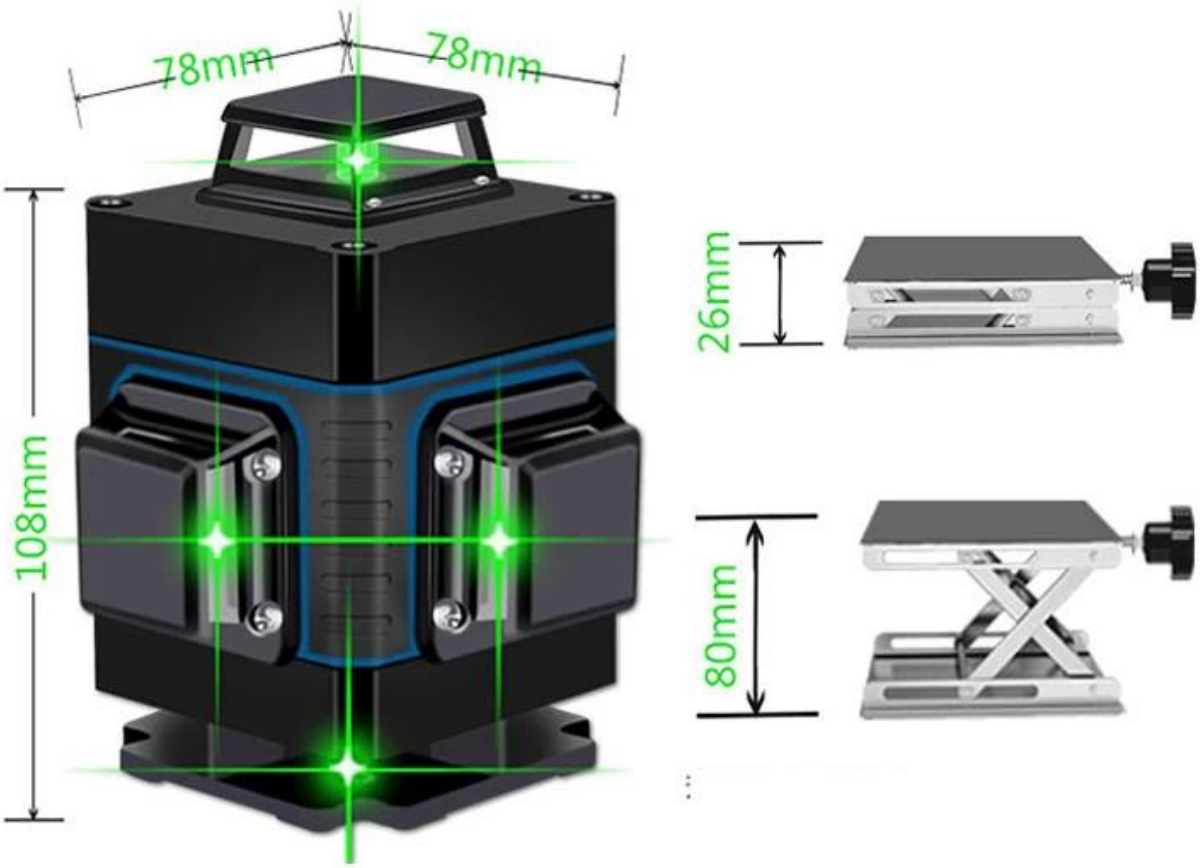

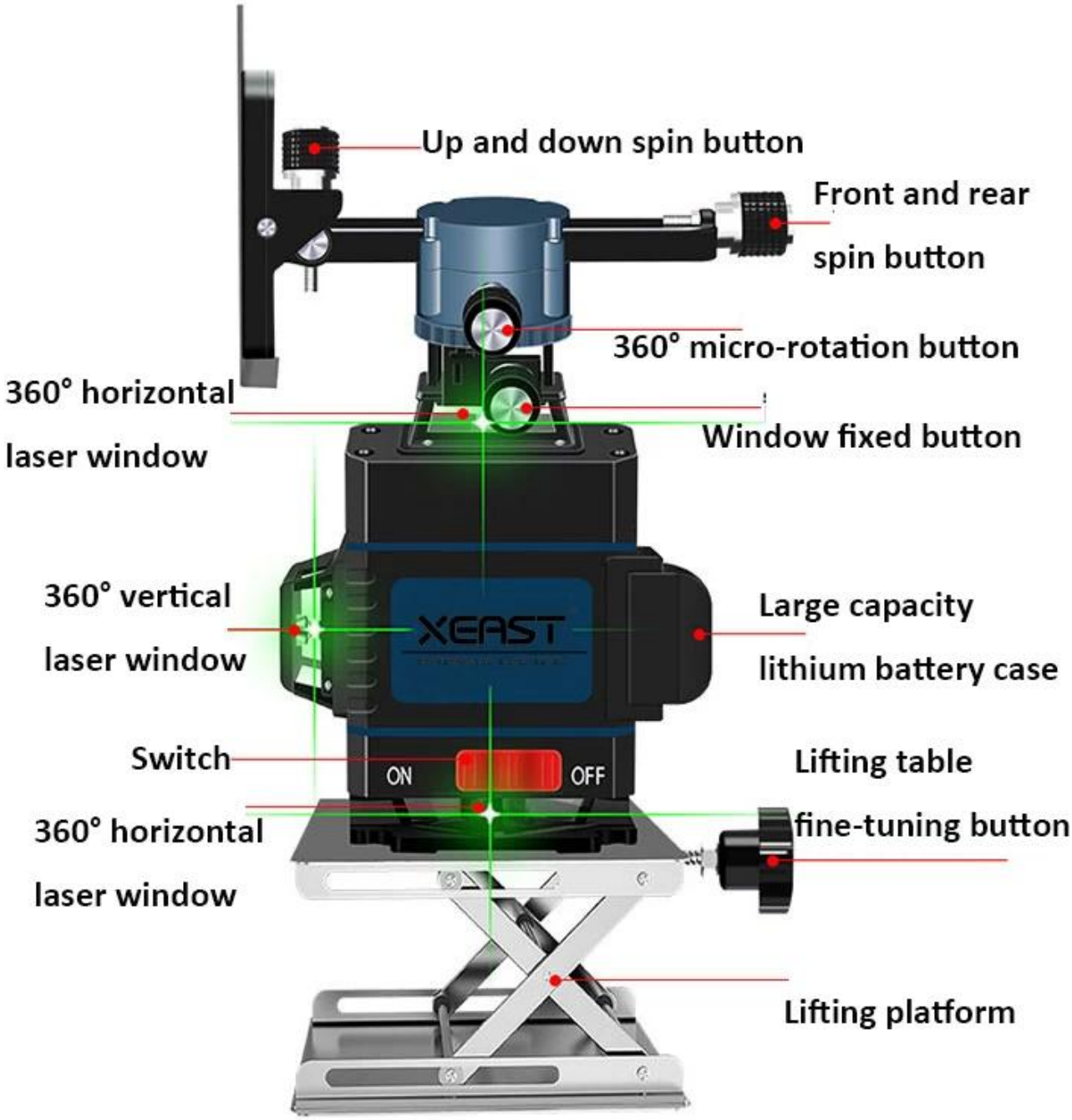
Up and down spin button
Front and rear
spin button
360° micro-rotation button
360° horizontal
laser window
Window fixed button
360° vertical
laser window
XEAST
Large capacity
lithium battery case
Switch
ON
OFF
Lifting table
360° horizontal
laser window
fine-tuning button
Lifting platform

18650 large capacity rechargeable lithium battery

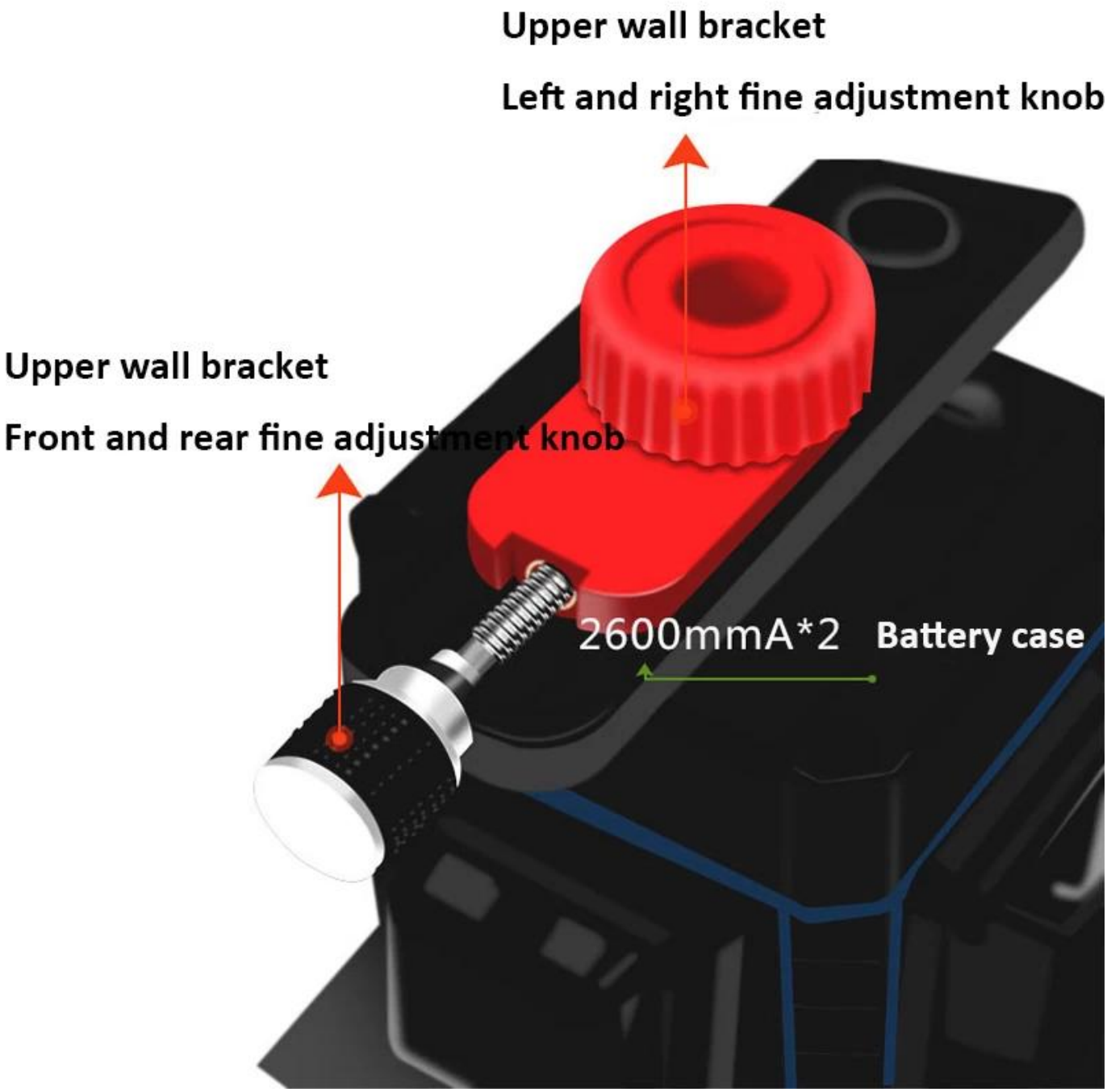

Direct use of lithium battery / connected power supply

Long distance
Remote operation

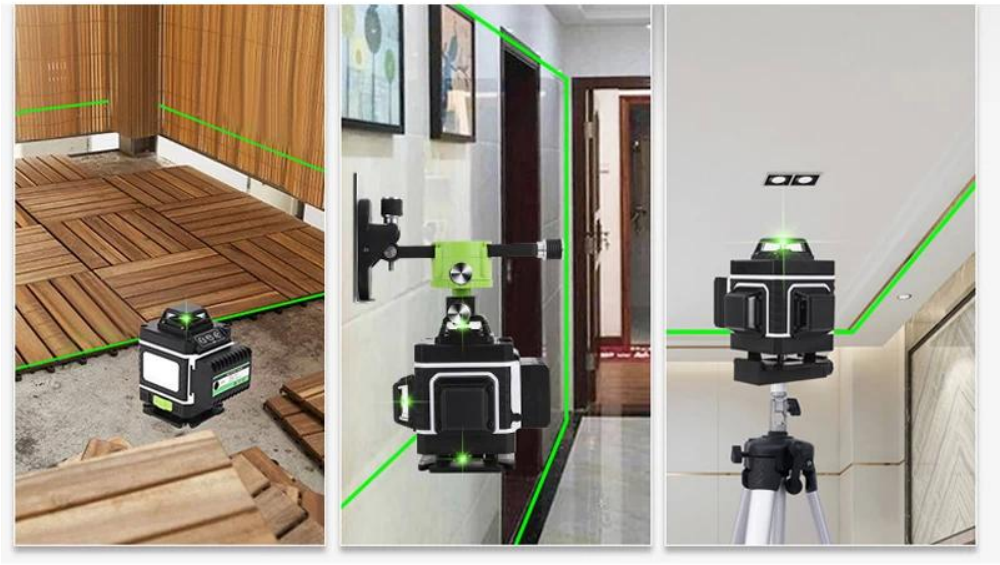

Floor tile Wall tile Ceiling tile

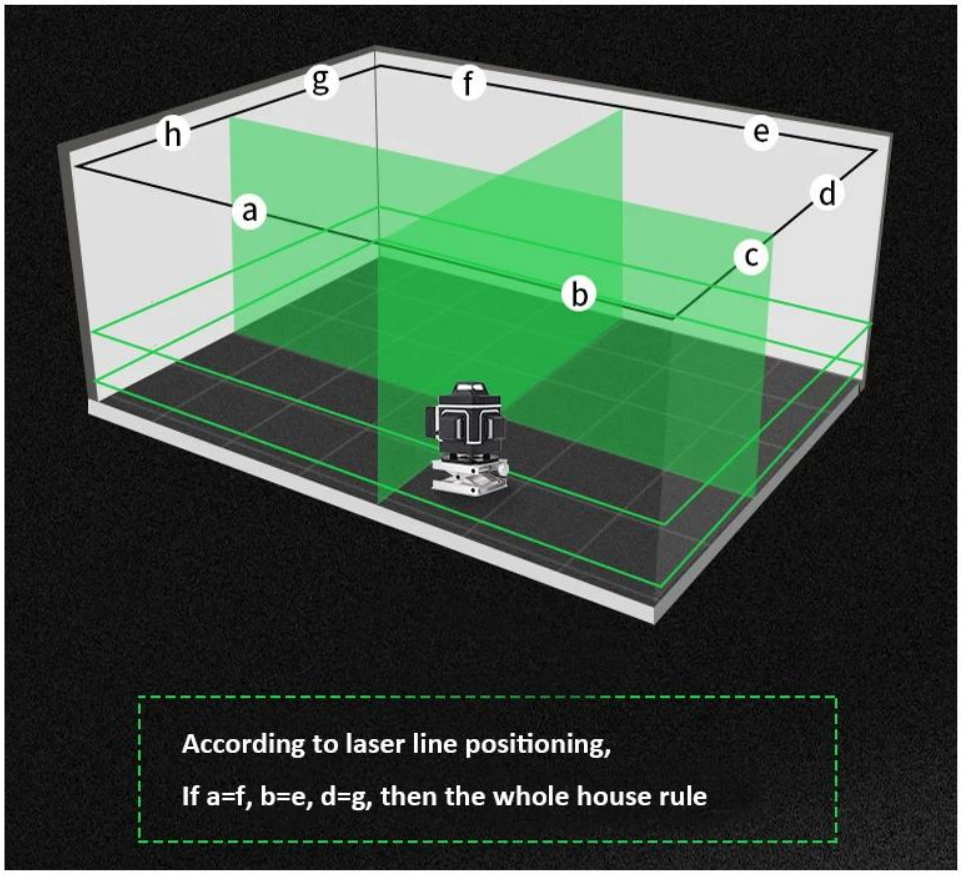

Package Include

Terms of Trade

1□□□□□□□□□□□T / T□L / C□Paypal□MoneyGram□□□□□□□□□□□□□□□□□□□□□
□□□□□□30□□□□□□□□□□70□□□□□□□
2□□□□□□□
□□DHL□TNT□UPS□□□□□□□□EMS□SPSR□139□□□□□□□
□□□LCL□FCL□□□
3□□

SALES TEAM

XEAST®

Your Testing Partner

WOKRSHOP