□□ □□□ □□ 4 ± 1□
□□□ □□ □□ □□□
Ultra Bright Laser Beams□ □□ □□□ □□□□□□□ □□□□□.
IP54 - □□ □ □□
□□□□ □□ □□□ □ □□□ □□
□□ □□ □□□□□□ □□□ □□□□□

□□□ □□ □□ □□ :

XE-903 □□□ □□ :
□□□ □□ : 510nm ~ 530nm
□□ □□ : IP54
□□ □□□ : ± 3mm / 10m
□□□ □□□ : 90 ° ± 30 "
□□ □□ □□ : 4 ° ± 1 °
□□ : 2mm / 10m.
□□ □□ (□□) : 40m, □□□ □□□□ □□ 50m
□□ □□: EU □□□
□□ □□ : □□ □□
□□ □□ : □□ □□□ □□ □□ 6 □□
□□□ □□ : II
□□□ □□ : □
□□ □□ □□ : -10 ° C - + 50 ° C
□□ □□ □□ : -20 ° C - + 70 ° C

□□□ □□□ □□ :

PWM : 1 : 1
□□□ : 10KHz (□□□□ PWM □ □□□, □□ □□□□ LR-6RG □□□ □□□□ □□ □□ □ □ □□)
□□□□□ : 3□ LED □□□ □□□□□
□□ □□ □□□ : ± 1.5mm (± 1 / 17 □□)
□□□ □□ □ □□ : 20mm (4/5 □□)
□□□ □□ □ □□ : 20mm (4/5 □□)
□□ □□ : 50m (200ft)
□□ □□ : 70 □□
□□ □□ □□ : (□□ □ □□ □□) 8 □
□□ : 1 * 9V □□□
□□ □□ □□ : -10 ℃ ~ + 50 ℃
□□ □□ □□ : -25 ℃ ~ + 70 ℃
□□ (LxWxH) : 140.5mm × 60mm × 35mm (5.5 x 2.5 x 1.5 □□)

□□ : 143g

● PRODUCT PICTURES

XEAST®

CAUTION !

0.91in/23mm
3.58in/91mm
1.69in/43mm
2.56in/65mm
3.5in/89mm

laser window
on-off key/pulse-function button
XEAST
battery charge interface
1/4 thread interface
Battery compartment
lithium battery

Sensing Window
Horizontal Vial
2.48in/63mm
1.06in/27mm
LED Display
Power Indicator
Volume Switch
30mm(1.18in)
LED Display
Marking Position
.51in/140mm
Vertical Vial
Battery Door
1/4-20 Threaded Mount

Slower beeping tone signals
Fast beeping tone signals
Beeping tone signals

self-leveling mode

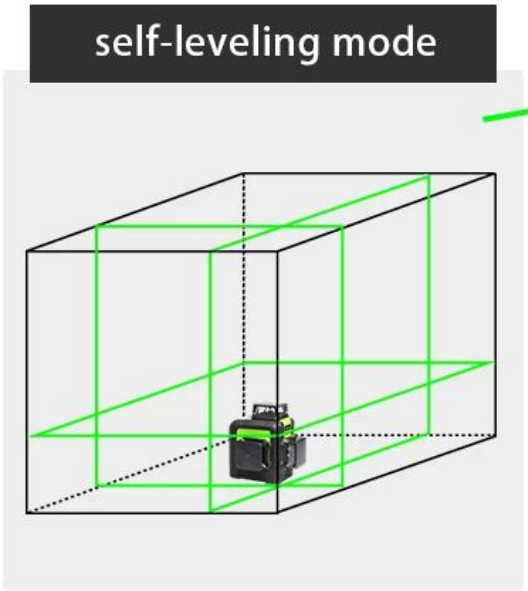

Self-level Available

Within 4 Degree

≤ ±4°

Pendulum Unlocked

manual mode

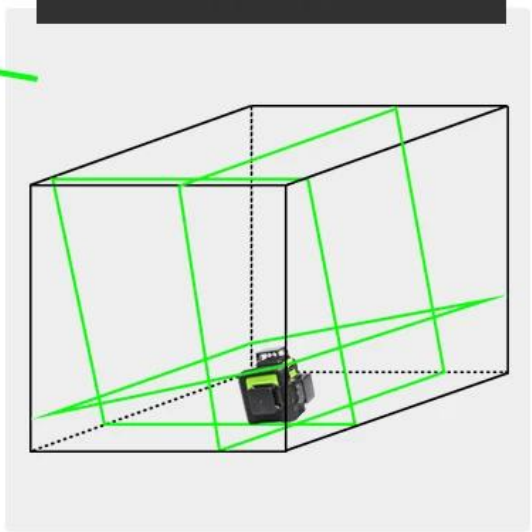

Maintain The 90° Angles

Blinks Every 3 Seconds

Pendulum Locked

POWER ON

Short press the power key or slide locking switch to turn the laser tool ON.

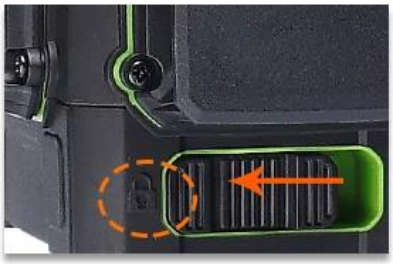

OFF

Lock the pendulum before short pressthe power button to turn the laser tool OFF.

1: After power on, short press the power switch once a time,the laser tool will project horizontal line, vertical line and cross line in turn.

2: After power on,long press the power key,when the blue light is on, the pulse mode is on.

GERMANY OSRAM GREEN LASER TECHNOLOGY

More brighter to ordinary green beam and red beam

VARIOUS KINDS OF FIXING METHOD

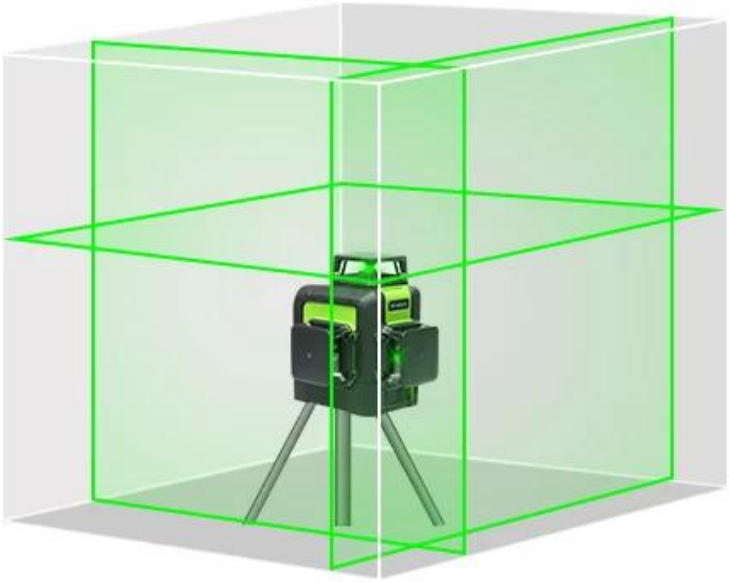

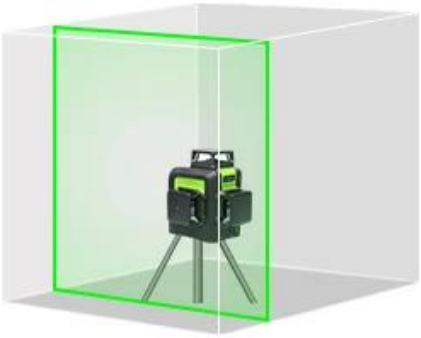

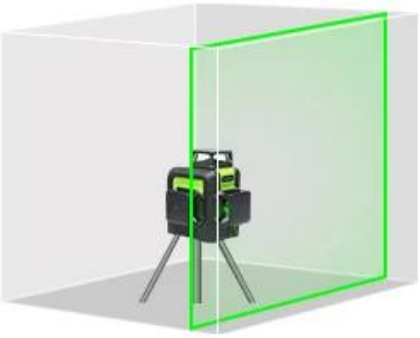

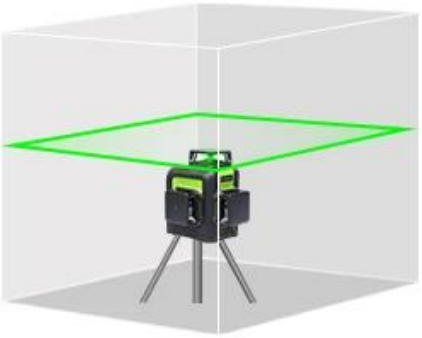

Three line switching function

Horizontal and vertical lines	Horizontal	vertical lines	vertical lines
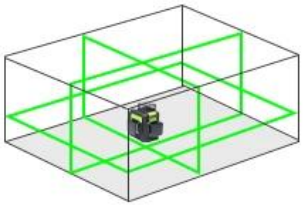	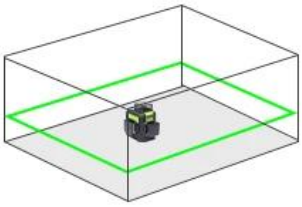	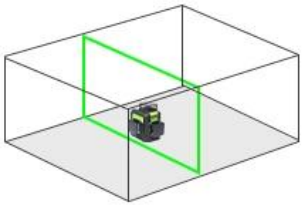	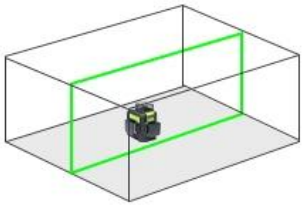

Horizontal and vertical lines	Horizontal	vertical lines	vertical lines
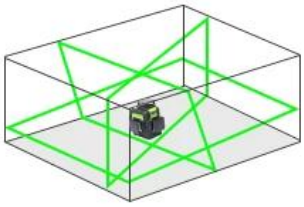	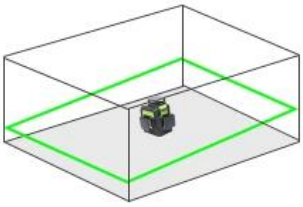	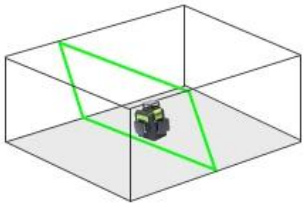	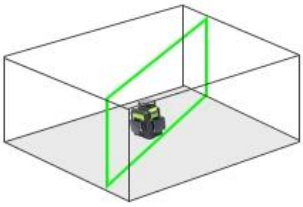

XEAST
Please turn on Pulse Mode of the Laser level before using the reciever

Package Include

XEAST®

Terms of Trade

1). □□ □□ : □□□ T / T, L / C, Paypal, MoneyGram □ Western Union□ □□□□□.
□□ □□ 30 % □□□ □ □□ 70 % □□.
2). □□ □□ :
□□□ □□□□□ □□ □□ □ □□□ □□ □□□ □□ □□□□□. □□ oftern □□ □□□□□ (DHL, TNT, UPS, □□□ □□□□□, EMS, SPSR, 139 □□ □□□ □□), LCL, FCL
□). □□□ □□ □□□□ □□ □□ □ □□□, □□□ □□□ □□ □ □□ □□□ □□ □□□ □□□ □ □□□.

Company Informations

SALES TEAM
YEAST®
Your Testing Partner
WOKRSHOP