XEAST VC903 AC/DC Voltage Digital Clamp Meter Ammeter 1200A Multimeter

SPECIFICATION

1.Frequency:99.99Hz/999.9Hz/9.999KHz/99.99KHz/999.9KHz/9.999MHz
2.Temperature:-20~1000℃/ -4~1832℉
3.capacitance:9.999nF/99.99nF/999.9nF/9.999uF/99.99uF/999.9uF/9.999mF
4.DC voltage:600mV/6V/60V/600V/1000V
5.AC voltage: 600mV/6V/60V/600V/750V
6.DC Ammeter:600uA/6000uA/60A/600A/1200A
7.AC Ammeter:600uA/6000uA/60A/600A/1200A
8.Resistance:600Ω/6K/60K/600K/6M/ 60MΩ
9.Duty cycle:1% to 99%,±(0.1%+2);
10.Measurement mode: Double-integral style A/D transform
11.Over range indication: OL
12.Working environment: 0~40℃, relative humidity < 80%
13.Supply power: 9V (6F22*1 Piece)
14.Dimension: 240*90*45mm
15.Weight: 325g;

PRODUCT PICTURES

CAT IV
XEAST
VC903 TRMS
µA 1200A
°C/°F
%Hz
V
OFF
DC/AC TRMS CLAMP METER
TRUE RMS
REL HOLD
MIN MAX
AUTO
DC
AC
hFE % °C °F MKΩHz nmF V A
SELECT
Hz/DUTY
RANGE/Δ
COM
600V CAT IV
VΩHz
µA

90mm
240mm
45mm
VC903 TRMS
DC/AC TRMS CLAMP METER
OFF
1200A
COM
SELECT
H/DUTY
RANGE/A

Serial No.2016102316
Made In China
WARNING
TO AVOID
ELECTRICAL SHOCK
REMOVE TEST LEADS
BEFORE OPENING CASE
OR BATTERY DOOR
CE
9V

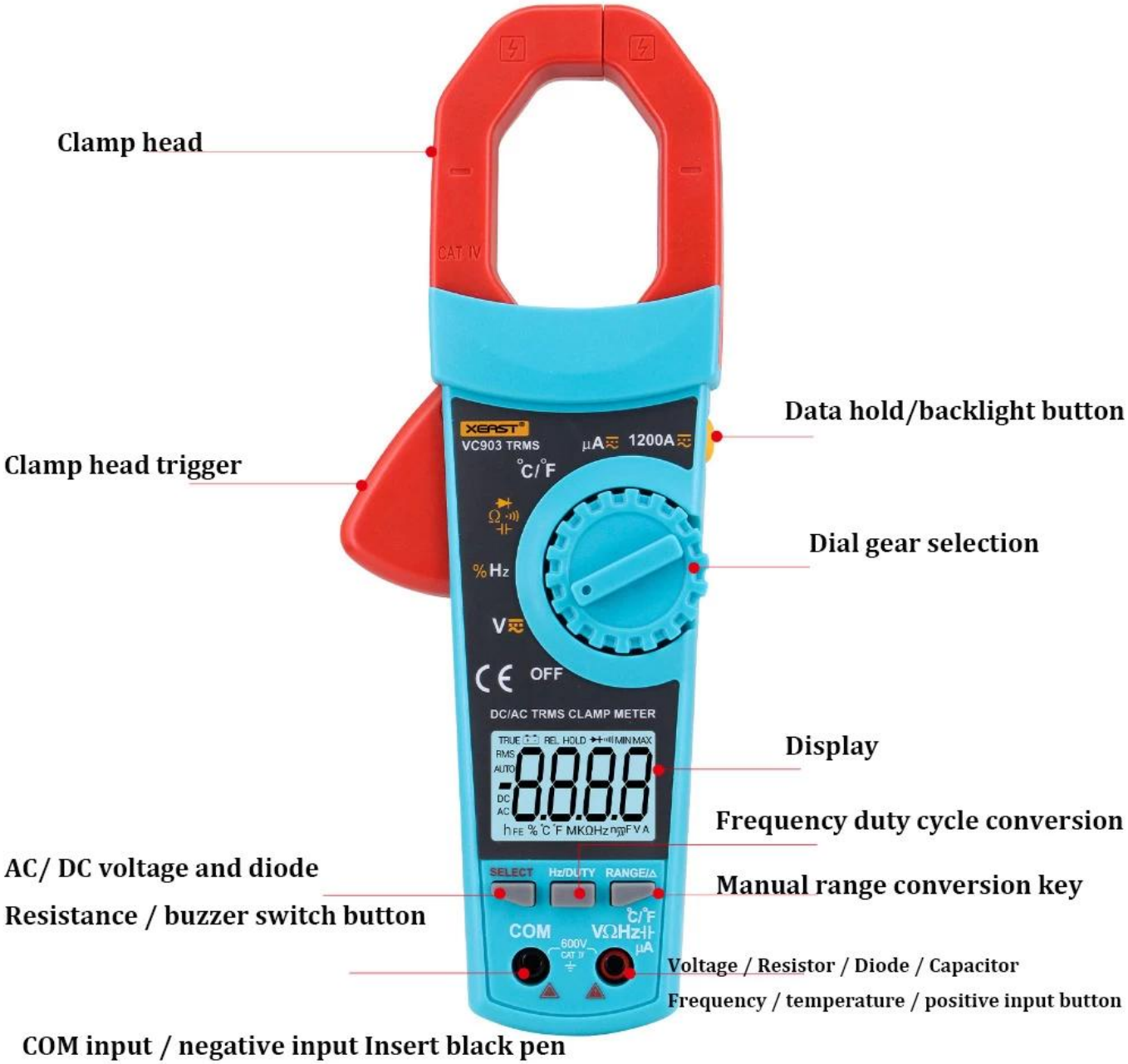
Clamp head
Data hold/backlight button
Clamp head trigger
Dial gear selection
Display
Frequency duty cycle conversion
AC/ DC voltage and diode
Resistance / buzzer switch button
Manual range conversion key
Voltage / Resistor / Diode / Capacitor
Frequency / temperature / positive input button
COM input / negative input Insert black pen
XEAST
VC903 TRMS
1200A
OFF
DC/AC TRMS CLAMP METER
SELECT
Hz/DUTY
RANGE/Δ
COM
600V
CAT IV

VC903 TRMS
µA 1200A
°C/°F
%Hz
V
OFF
DC/AC TRMS CLAMP METER
SELECT
Hz/DUTY
RANGE/Δ
COM
VΩHz
µA

(1) Front Panel（see the picture on the right）

1. Jaws
2. Jaw Release
3. Rotary Switch: To change mode or range。(from OFF, clockwise)
   - 3a. OFF
   - 3b. AC/DC Voltage
   - 3c. Frequency
   - 3d. Resistance/Continuity/Diode/Capacitance
   - 3e. Temperature
   - 3f. AC/DC Current (μA)
   - 3g. AC/DC Current (A)
4. LCD Display
5. Hz/Duty Cycle Botton
6. SELECT: To toggle between AC/DC, Resistance/Continuity/Diode/Capacitance, or ℃/℉, press this botton.
7. RANGE: press this botton to enter the manual range; each push increases the range; when the highest range is reached, next push will go back to the lowest range; to exit the manual range mode, press the button for 2 seconds.
8. COM: Common terminal for all measurements.
9. VΩHz: Input terminal for voltage, frequency, resistance, continuity, diode, capacitance, temperature, current (no more than 6000 μA), and duty cycle measurements.
10. HOLD: To hold the current reading, press this button and you will see "HOLD" on the display; press again to cancel. To turn on the backlight, press this botton for more than 2 seconds; long-press again to turn off.

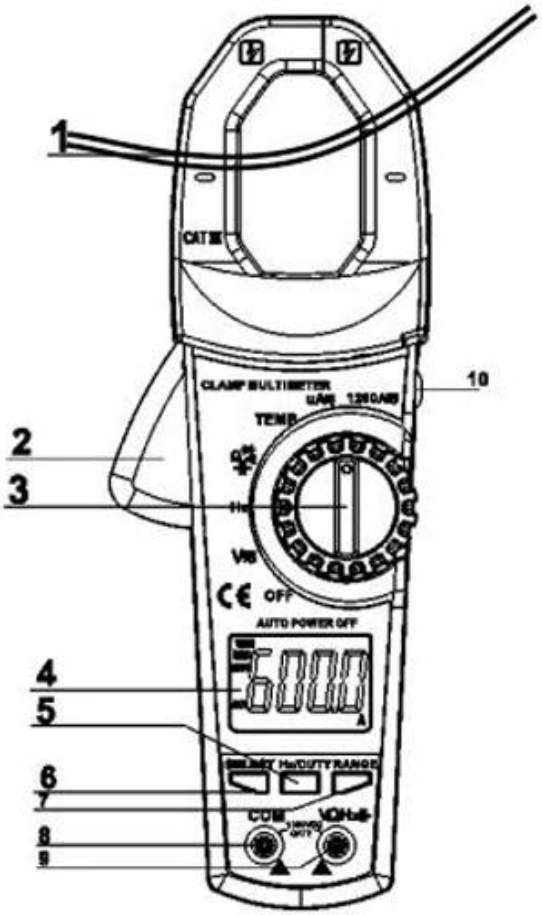

Terms of Trade

1). Terms of Payment:
We accept T/T, L/C,Paypal,MoneyGram and Western Union.
30% deposit and other 70% balance before shipment.
2). Terms of Shipping:
It depends on clients order quantity and your special request.We oftern adopt Express(DHL, TNT,UPS,FEDEX ,EMS,SPSR,139 express and so on),LCL,FCL .
Items will be careful checking before shipment,and we will update the delivery status timely after the goods are sent out.

Company Informations

SALES TEAM
YEAST®
Your Testing Partner
WOKRSHOP